Leica EM TIC020

Triple Ion-Beam Cutter

for Easy Site Specific Sample Preparation

Living up to Life

Leica

MICROSYSTEMS

Ion Beam Slope Cutting

Ion beam slope cutting is a technique used to produce angled and cross-sections of hard/soft, porous, brittle and heterogeneous material for scanning electron microscopy (SEM) and microstructure analysis (EDS, WDS, Auger, EBSD).

Most often it is the only method to achieve high quality cross-sections of inorganic material. The process reveals the internal structures of a sample whilst minimizing mechanical deformation or damage.

The technology of the Leica EM TIC020 surpasses conventional slope cutting instruments. With its three ion beams, the Leica EM TIC020 can mill at high rates, cut broad and deep into the sample and create smooth surfaces resulting in quality cross-sections for almost any material quickly and easily.

Todays research facilities seek faster and simpler methods of sample preparation without having to forgo quality. The innovative technology of the Leica EM TIC020 triple ion beam cutter offers *the* solution to help laboratories with high expectations achieve their goals.

Leica Design by Werner Hölbl

Simple

The Leica EM TIC020 features three saddle field ion sources located in one assembly. This is arranged perpendicular to the sample surface. So the sample (mounted on a holder) does not require an oscillating movement to reduce shadowing/curtaining effects. Also, it enables an efficient heat transfer from the sample.

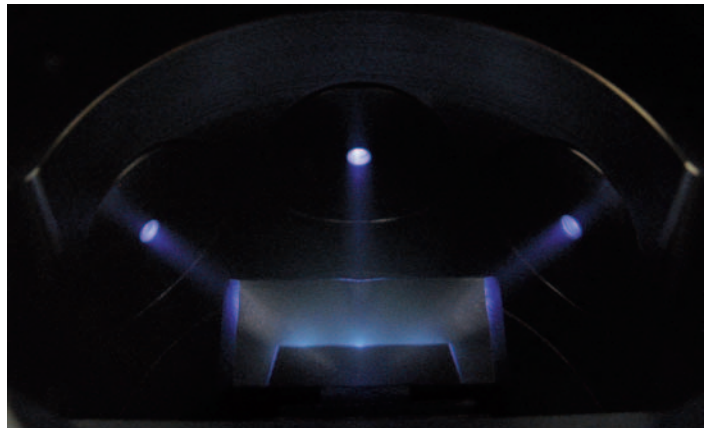

Three ion beams intersect at the center edge of the mask forming a milling sector of 100° cutting the exposed sample (30 to 100 µm above the mask) until the area of interest is reached.

The unique three ion beam system optimizes the cross-section quality and reduces working time with its ability to cut broad and deep at high speeds.

Unique triple ion beam system

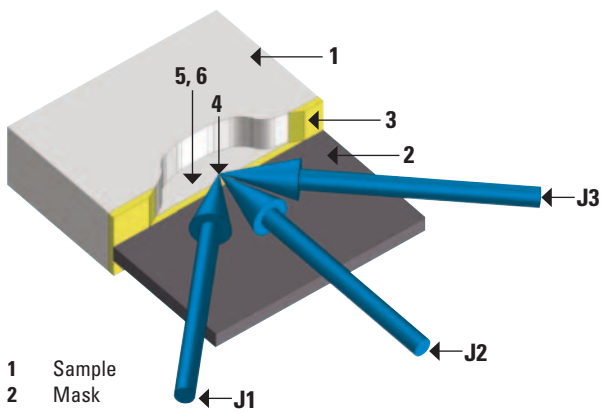

1 Sample
2 Mask
3 Sample surface
4 Cross over point of ion beams
5 Area of interest
6 Direction of observation
J1, J2, J3 ion beams

The process of the slope-cut (dark area/Gaussian profile) can be observed via the stereomicroscope.

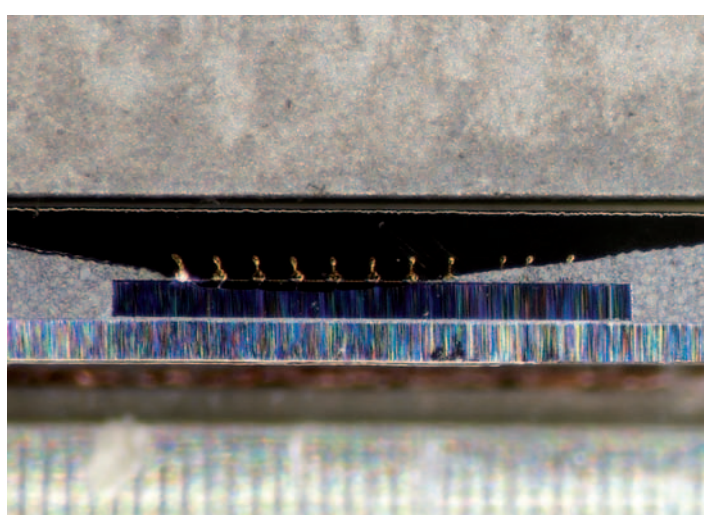

Innovative features in design and operation

- Cuts high quality angled and cross-sections
- Mills at high rates (120 µm/h for Si), cuts broad and deep, creates smooth surfaces
- Practically any inorganic material can be prepared
- Prepares up to 50 x 50 x 10 mm large samples
- Easy sample mounting and alignment to the mask
- Various sample holder sizes can be used
- No sample movement during processing required
- Simple operation via touch screen, no special skills necessary
- Process monitoring via stereomicroscope
- LED illumination for optimal specimen viewing
- Quick and easy access for maintainance
- Highly reliable, high throughput, cost-efficient

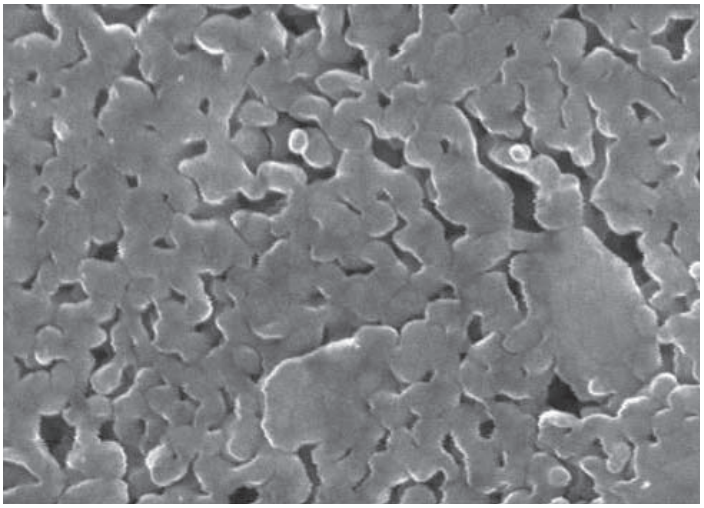

SEM image of porous ceramic after slope-cutting

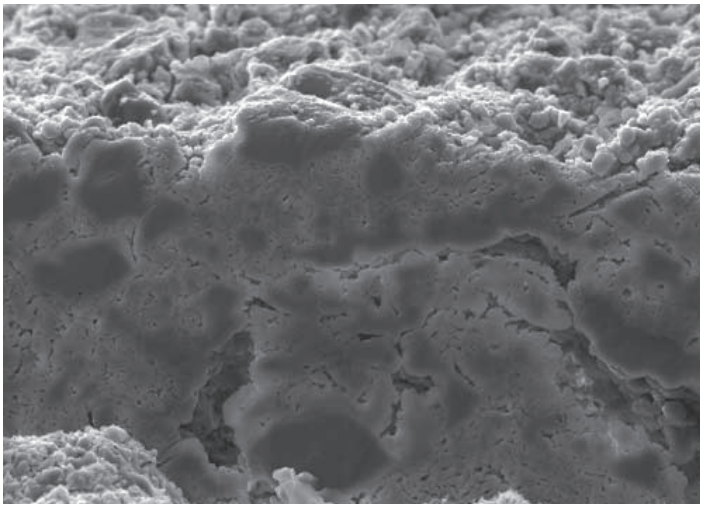

SEM image of a Mullit after slope cutting

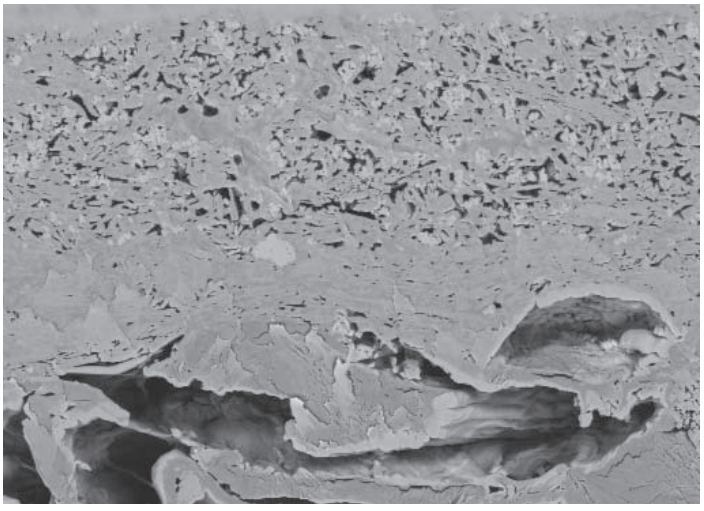

SEM image of cross-sectioned paper

Simple

• Sample mounting
An exchangeable holder (two sizes are available) is used for sample mounting. The sample is fixed onto the holder using either double-sided Cu tape or glue.

• Sample masking
After loading the sample, the sample holder is placed between a sample stage and a mask. The sample is perpendicular to the mask. The mask covers the area of interest leaving an unwanted portion of the sample exposed. The edge of the mask defines the surface to be cut. The precision mask has a fixed position in relation to the ion beams and does not require any adjustment. The mask exchange is fast and easy.

• Sample stage
A manual high precision three axis sample stage allows accurate sample movement in X, Y and Z direction. Sample viewing is possible in all positions using the stereo microscope and LED illumination. The stage can be pivoted to laterally and vertically adjust the sample. The stage permits a cutting position accuracy of better than 10 µm. Samples as large as 50 x 50 x 10 mm and cross-sections >1 mm deep and up to several mm wide can be prepared.

• Oil-free high vacuum
An integrated turbo molecular drag pump backed by a multistage diaphragm pump creates an oil-free ultimate vacuum of < 5 x 10^{-6} mbar. The gas inlet system permits stable operation of the triple ion source at working pressures between 5 x 10^{-5} mbar and 5 x 10^{-4} mbar. A compact process ion gauge monitors the vacuum condition.

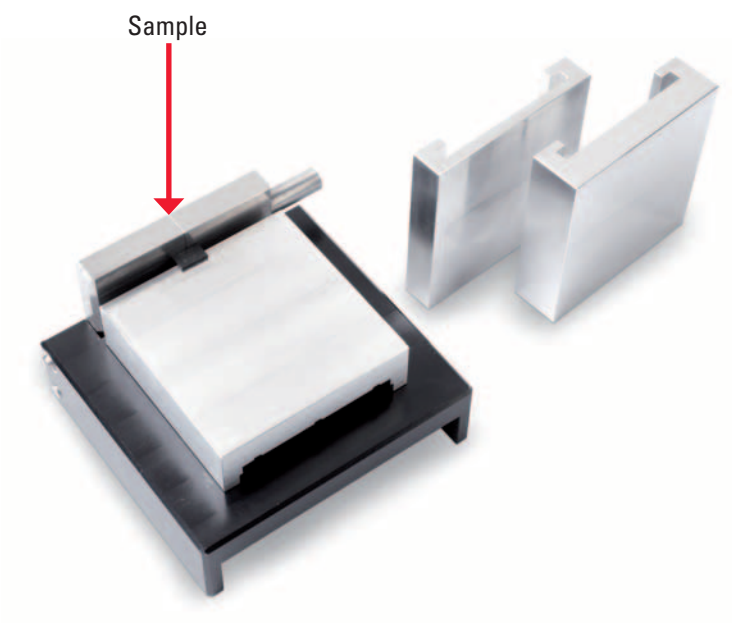

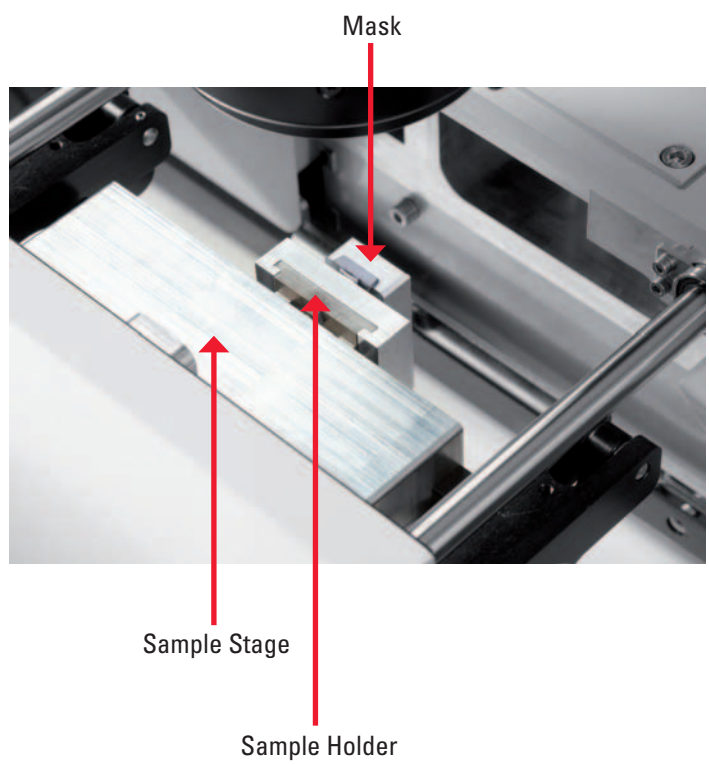

Vertical adjustment of the sample

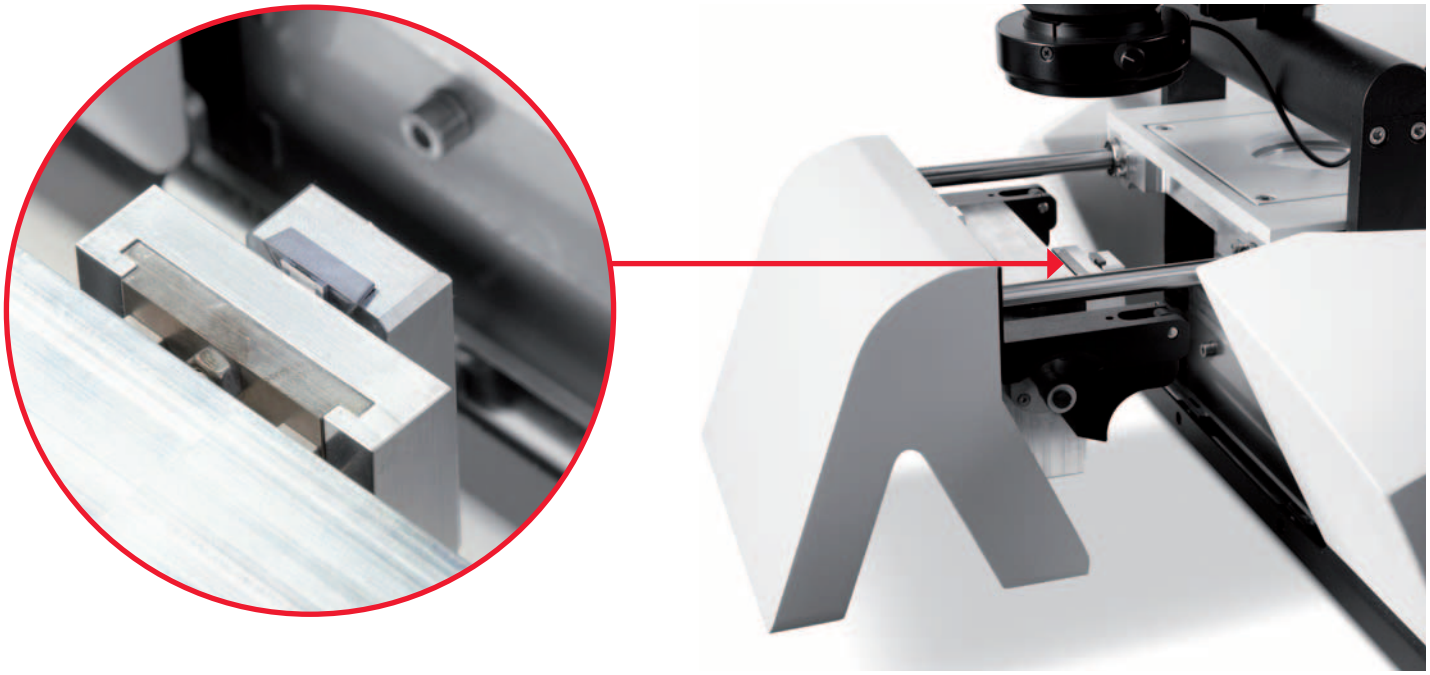

Lateral adjustment of the sample

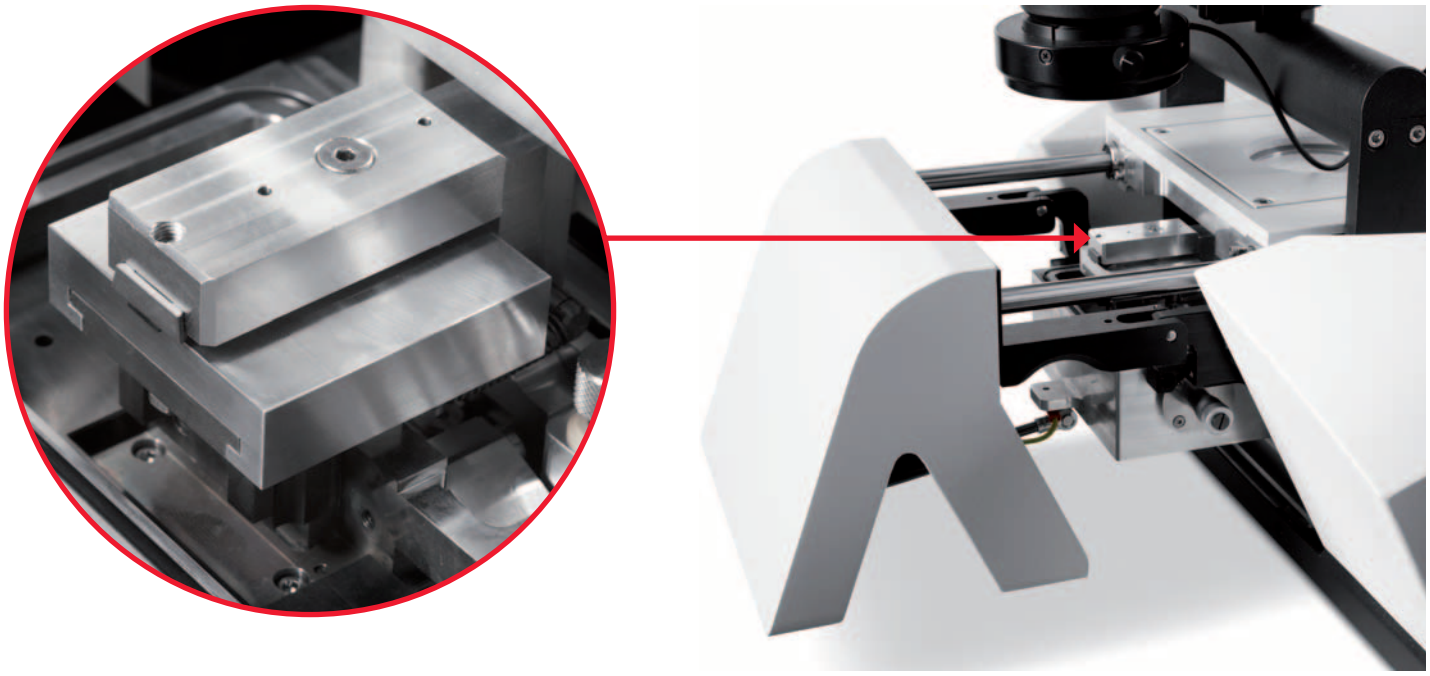

Easy

• Process monitoring
The high precision, three axis stage in conjunction with a high resolution stereo microscope and LED illumination enables structures to be precisely observed at selected locations on the sample. In addition to the timer setting, the process can be terminated manually as soon as the area of interest is reached.

• Short processing time
The milled cross section can reach a cutting depth of > 1 mm and several mm in width. The user can choose the exact location, orientation and depth of the cross section. Short process time is achieved due to the high milling rate of the three ion sources. Depending on the requirements of the sample material, the sources may be operated over a wide range of ion energy (up to 8 keV).

• Easy to use
All parameter settings for the milling process are operated via a single touch screen control panel. No special skills are required. Practically any material, i.e. metals, ceramics and polymers can be prepared with utmost accuracy, ease and speed.

The unique touch screen control panel makes operating the Leica EM TIC020 simple.

The stereo light microscope enables mask positioning before milling and sample viewing during milling.

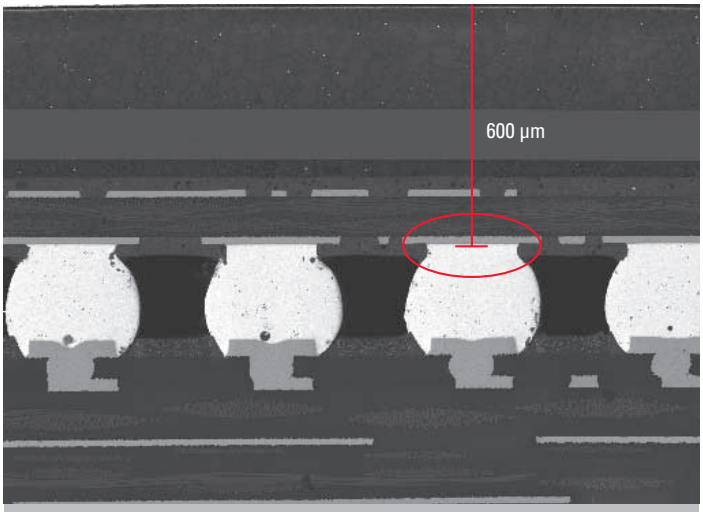

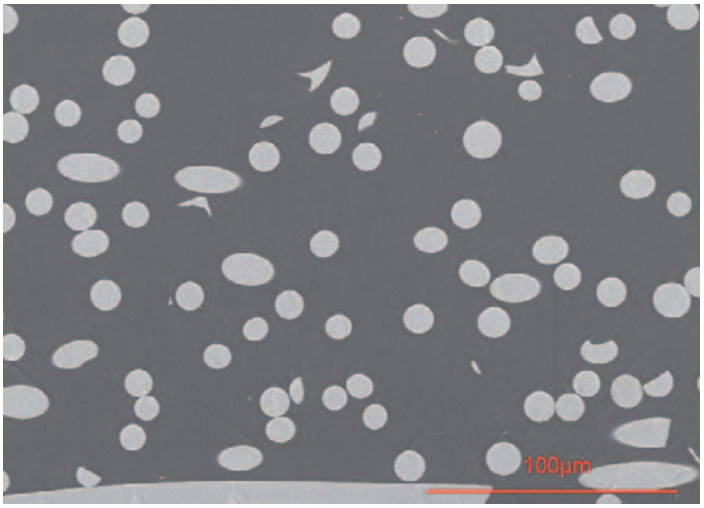

Cross section of glass fibre-reinforced polyamide

Large area ion beam slope cut of a solder bump structure and its intermetallic area

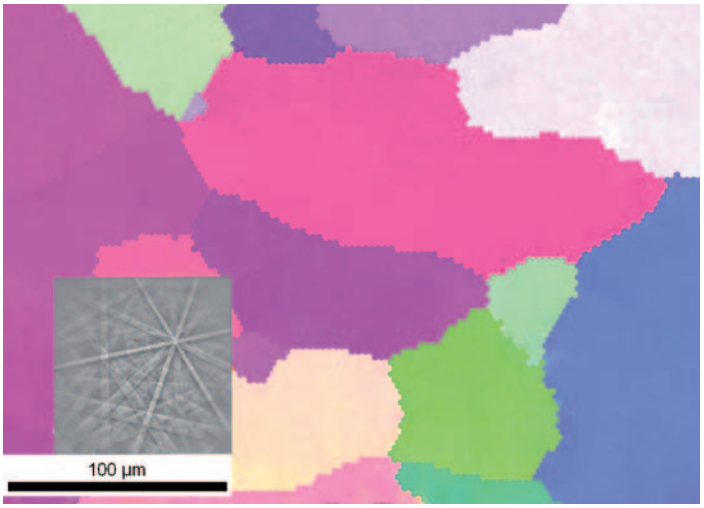

EBSD and OIM image of ion-beam slope cut area of Al-alloy

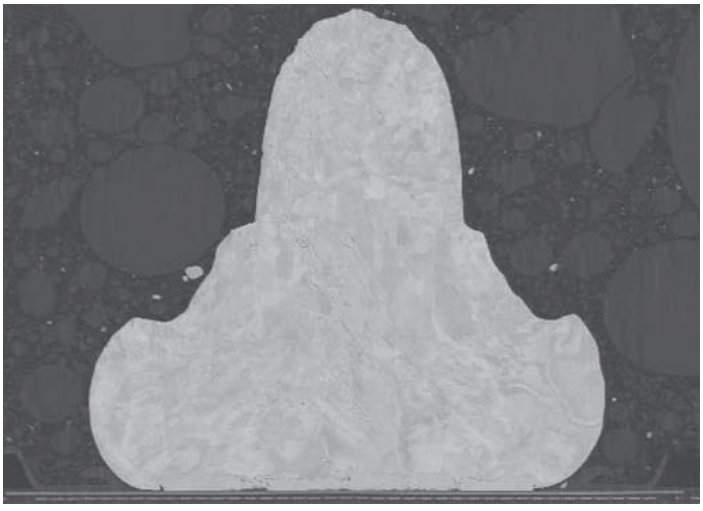

SEM image of gold-wire bonding of IC-package

SEM image of a 90° slope cut of a solder ball on Ni/Co pad

Synergies with the Leica EM TXP

Prior to using the Leica EM TIC020, a mechanical preparation is often required to get as close as possible to the area of interest. The Leica EM TXP is a unique target surfacing system developed for cutting and polishing samples prior to follow-on techniques with instruments such as the Leica EM TIC020. The Leica EM TXP is specially designed to pre-prepare samples by sawing, milling, grinding and polishing. It excels with challenging specimens where pinpointing and preparing difficult targets becomes easy.

The Leica EM TXP is a unique target surfacing system developed for cutting and polishing samples prior to follow-on techniques with the Leica EM TIC020.

Satisfying High Expectations

90° slope cut of a chip capacitor on a package substrate with EDS images. The clearly visible single layers Cu and Ni shows quality cross-sections.

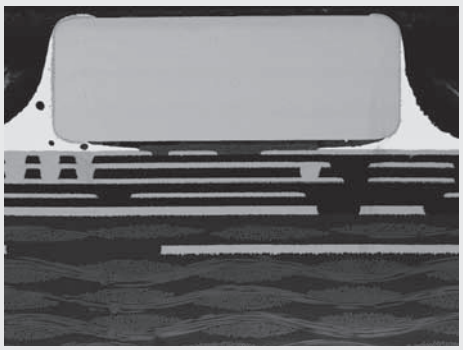

SEM Image

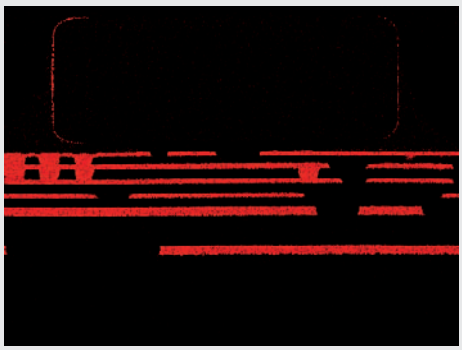

Cu Kα

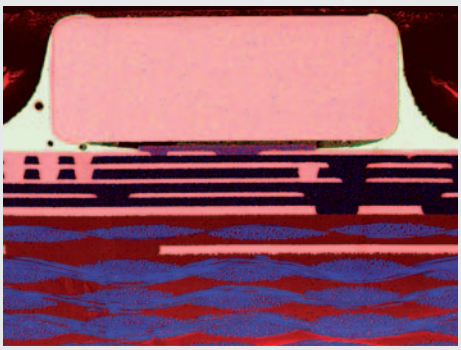

Mix Map

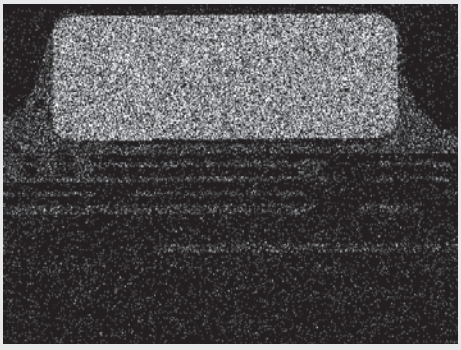

Ba Lβ2

Sn Lα

Ni Kα

“With the user, for the user”
Leica Microsystems

Leica Microsystems operates internationally in four divisions, where we rank with the market leaders.

• Life Science Division

The Leica Microsystems Life Science Division supports the imaging needs of the scientific community with advanced innovation and technical expertise for the visualization, measurement, and analysis of microstructures. Our strong focus on understanding scientific applications puts Leica Microsystems’ customers at the leading edge of science.

• Industry Division

The Leica Microsystems Industry Division’s focus is to support customers’ pursuit of the highest quality end result. Leica Microsystems provide the best and most innovative imaging systems to see, measure, and analyze the microstructures in routine and research industrial applications, materials science, quality control, forensic science investigation, and educational applications.

• Biosystems Division

The Leica Microsystems Biosystems Division brings histopathology labs and researchers the highest-quality, most comprehensive product range. From patient to pathologist, the range includes the ideal product for each histology step and high-productivity workflow solutions for the entire lab. With complete histology systems featuring innovative automation and Novocastra™ reagents, Leica Microsystems creates better patient care through rapid turnaround, diagnostic confidence, and close customer collaboration.

• Surgical Division

The Leica Microsystems Surgical Division’s focus is to partner with and support surgeons and their care of patients with the highest-quality, most innovative surgical microscope technology today and into the future.

The statement by Ernst Leitz in 1907, “with the user, for the user,” describes the fruitful collaboration with end users and driving force of innovation at Leica Microsystems. We have developed five brand values to live up to this tradition: Pioneering, High-end Quality, Team Spirit, Dedication to Science, and Continuous Improvement. For us, living up to these values means: **Living up to Life**.

Active worldwide

Australia:	North Ryde	Tel. +61 2 8870 3500	Fax +61 2 9878 1055
Austria:	Vienna	Tel. +43 1 486 80 50 0	Fax +43 1 486 80 50 30
Belgium:	Groot Bijgaarden	Tel. +32 2 790 98 50	Fax +32 2 790 98 68
Canada:	Richmond Hill/Ontario	Tel. +1 905 762 2000	Fax +1 905 762 8937
Denmark:	Herlev	Tel. +45 4454 0101	Fax +45 4454 0111
France:	Rueil-Malmaison	Tel. +33 1 47 32 85 85	Fax +33 1 47 32 85 86
Germany:	Wetzlar	Tel. +49 64 41 29 40 00	Fax +49 64 41 29 41 55
Italy:	Milan	Tel. +39 02 574 861	Fax +39 02 574 03392
Japan:	Tokyo	Tel. +81 3 5421 2800	Fax +81 3 5421 2896
Korea:	Seoul	Tel. +82 2 514 65 43	Fax +82 2 514 65 48
Netherlands:	Rijswijk	Tel. +31 70 4132 100	Fax +31 70 4132 109
People’s Rep. of China:	Hong Kong	Tel. +852 2564 6699	Fax +852 2564 4163
Portugal:	Lisbon	Tel. +351 21 388 9112	Fax +351 21 385 4668
Singapore		Tel. +65 6779 7823	Fax +65 6773 0628
Spain:	Barcelona	Tel. +34 93 494 95 30	Fax +34 93 494 95 32
Sweden:	Kista	Tel. +46 8 625 45 45	Fax +46 8 625 45 10
Switzerland:	Heerbrugg	Tel. +41 71 726 34 34	Fax +41 71 726 34 44
United Kingdom:	Milton Keynes	Tel. +44 1908 246 246	Fax +44 1908 609 992
USA:	Bannockburn/Illinois	Tel. +1 847 405 0123	Fax +1 847 405 0164

and representatives in more than 100 countries

Leica EM TIC020 - E - 12/08 **Order No. 16130002**

www.leica-microsystems.com

Leica MICROSYSTEMS